Construction of a Sunflower Pedigree Map

M. Korell, G. Mösges and W. Friedt
Institute of Agronomy and Plant Breeding I
Justus Liebig University, Ludwigstr. 23, 6300 Gießen, Germany

Summary

A pedigree map of sunflower (*Helianthus annuus*) (Fig. 1) was prepared which contains detailed information on North American sunflower materials published in various issues of Crop Science until 1989 completed by information from Jerry F. Miller (pers. communication). A cataloque provides further information about the pedigree and important agronomic traits, like disease resistances, oil content and maturity of the released germplasm pools, germplasms, populations, lines and cultivars. Parts of this cataloque are shown in table 1.

According to the pedigree the restorer lines RHA 278 and 279 are derived from an F_5 sib-selection. They differ in the Pl_2-gene confering resistance to downy mildew, caused by *Plasmopara halstedii* (Farl.) Berl. et de Toni. These two lines were investigated by Southern analysis with 75 genomic probe/enzyme combinations. However no Restriction Fragment Length Polymorphism (RFLP) could be detected (Fig. 2). These results confirm the supposed close relationship between these two lines.

Introduction

The nearly complete information about the North American sunflower materials documented in various issues of Crop Science is a powerful tool for sunflower breeders to select interesting genotypes for their breeding program. The North American sunflower pedigree map should be helpful for obtaining the right information and breeding material from the New World. This material takes its origin in old open pollinated populations from Russia (VNIIMK, Mammoth Russian, Armavirsky, Mennonite, Smena, Armavirec, Jdanovsky, Peredovik, Pervenets). Information which is not documented in Crop Science was provided by Jerry Miller (pers. communication).

The complete pedigree consists of the following four parts:

* a map which shows the genetic relationships (Fig. 1)
* a cataloque which contains the original pedigree data and the important agronomic traits like disease resistances, oil content, maturity and further comments (table 1)
* a list of abbreviations
* a reference index for rapid orientation

Additionally the cataloque, the list of abbreviations and the reference index are available on IBM compatible EDP.

A second aim of this investigation was to use molecular methods for verification of the supposed relationships of germplasms and lines by application of RFLP-analysis. For RFLP-analysis the restorer lines RHA 278 and RHA 279 were used. The two lines are derived from an F_5 sib-selection

Fig. 1: Pedigree Map of Sunflower

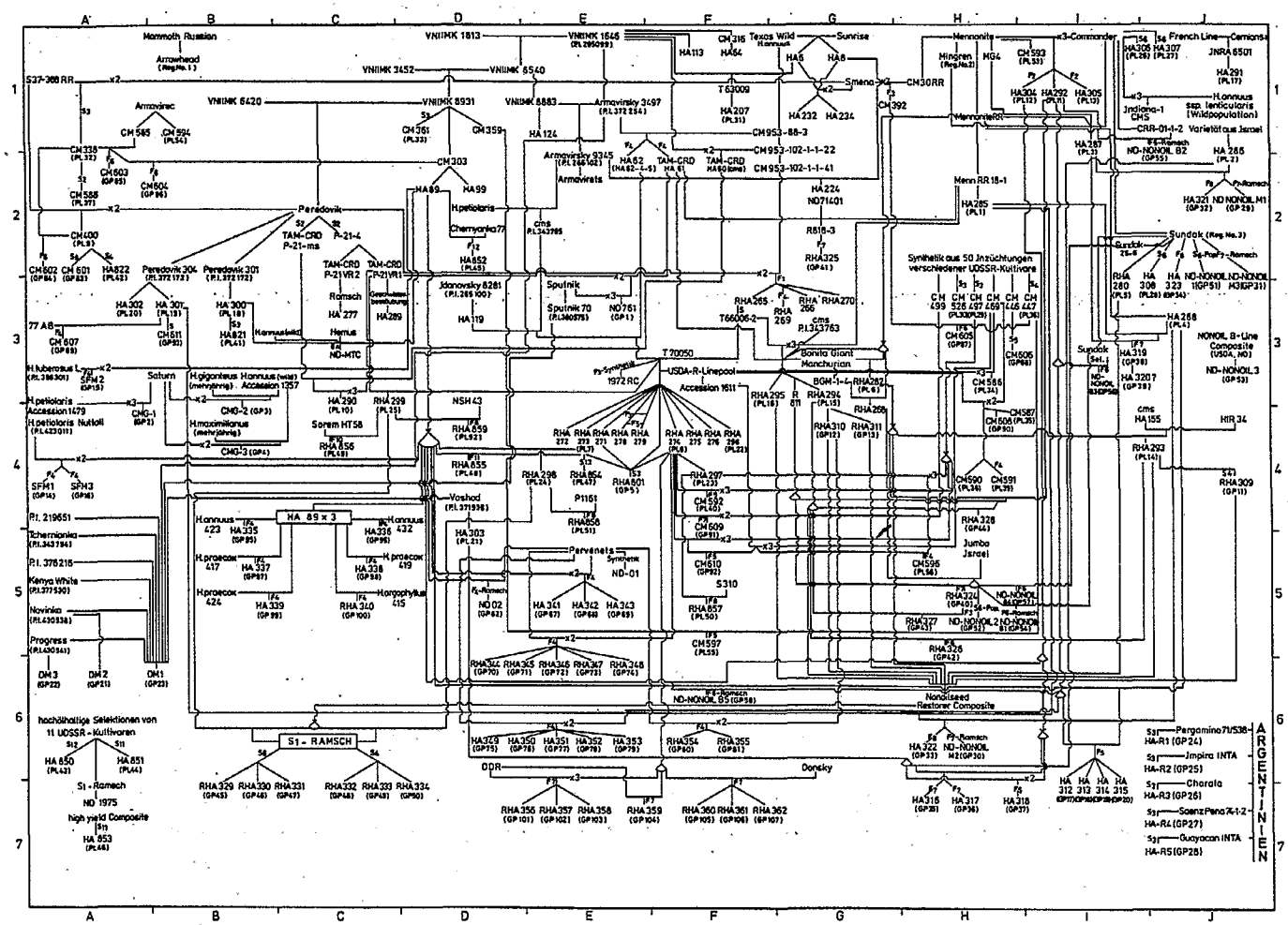

Table 1: Cataloque of Important Agronomic Traits

Line	Year/Origin	Pedigree	Resistance	Oil	Maturity	Remarks (Crop Sci.)	Map
Parental Lines and Germplasms							
HA 89	1971/ Texas	selected from CM 303	Verticillium dahlie (V_1)	Oil	middle		D2
HA 99	1971/ Texas	sib-selection from HA 89	Verticillium dahlie (V_1)	Oil	middle		D2
HA 113	1971/ Texas	isolated from VNIIMK 1646		Oil	middle		F1
Restorer Lines and Populations							
RHA 278	1975/ Texas, North Dakota	cms PI 343765/ HA 119// HA 62-4-5 and single plant selections from T 66006-2 (RHA 265)	Plasmopara halstedii (Pl_2)	Oil	middle	recessively branched at the upper internodes	E4
RHA 279	1975/ Texas, North Dakota	cms PI 343765/ HA 119// HA 62-4-5 and single plant selections from T 66006-2 (RHA 265), F_5 sib-selection from RHA 278	Puccinia helianthi	Oil	middle	recessively branched at the upper internodes	E4
RHA 269	1975/ Texas, North Dakota	selfpollinated F_1 plant from the backcross Peredovik*2/ CM 953-102-1-1-41, F4 sib-line from RHA 266	Puccinia helianthi	Oil	middle	environmental sensitive form of recessive basal branching, taller and later than RHA 266	G3
Germplasm Pools							
Helianthus Germplasm Pool I (GP 7)	1981/ California	originated from 10000 lines from the Northrup King Company plus 100 lines from other sources		Oil		evaluated for seedling vigor, agronomic type (22:1276)	-
Cultivars							
Mingren (Reg. No. 2)	1964/ Minnesota	five generations of mass selection in the Mennonite variety		Nonoil	middle	single-headed (7:404)	H1

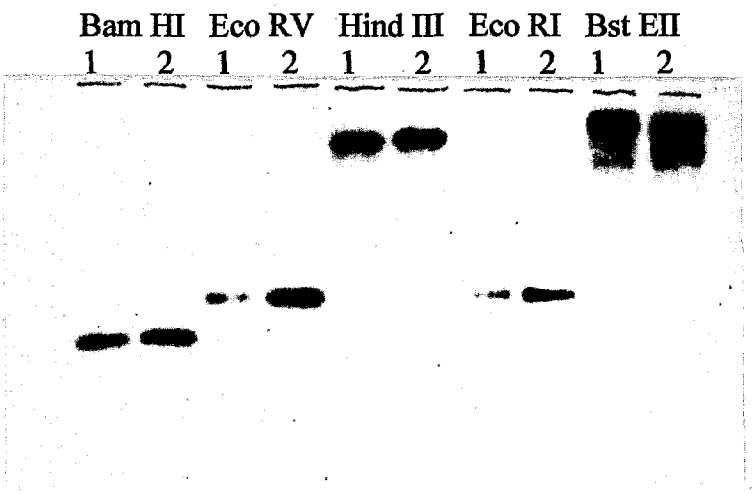

Hybridization pattern obtained after probing the digested DNA of RHA 278 (1) and RHA 279 (2) with the genomic clone 1 (0,9 kb)

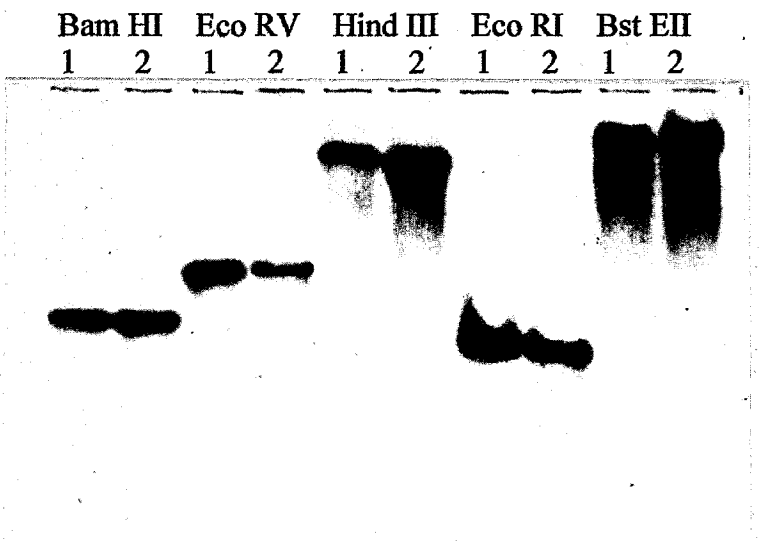

Hybridization pattern obtained after probing the digested DNA of RHA 278 (1) and RHA 279 (2) with the genomic clone 10 (1,4 kb)

Fig. 2: Autoradiographs

differing in the Pl_2-gene which is first mentioned in the line HA 61 (ZIMMER and KINMAN 1972) a sibline of the donorparent HA 62-4-5 from which the resistance-gene of RHA 278 is derived.

Experiments and Conclusions

Plants of the restorer lines were grown in the greenhouse and the young leaves were harvested on ice after two days incubation in a dark room to avoid an accumulation of polysaccharides and stored by -80 °C.

DNA from leaves was extracted according to MURRAY and THOMPSON (1980) and purified with a method for a large scale plasmid minipreparation (WILSON 1987).

The genomic DNA (ca. 10 µg per gel sample) was digested with the restriction enzymes Bam HI, Eco RV, Hind III, Eco RI and Bst EII, respectively, using 2.5 enzyme units per µg DNA for 5 h or overnight, according to the suppliers instructions (Boehringer). The restriction fragments were size-separated on a 0.8% agarose gel (MANIATIS et al. 1989) and transferred according to SOUTHERN (1975) on a GSP-membrane (Du Pont).

The inserts of 15 random genomic sunflower clones from RHA 278 with a molecular size between 400 and 3200 bp were used as probes. These clones were generated from total DNA digested with Eco RI and Bam HI. The fragments were separated on a 1% agarose gel. The low molecular fragments (< 5000 bp) were electroeluted and ligated into Eco RI- and Bam HI-digested pUC 18 vector. Clones were obtained after transformation of *E. coli* strain JM 83. Recombinant plasmids were purified according to BIRNBOIM and DOLY (1979). The inserts were isolated by electroelution from agarose gels and labelled with ^{32}P-a dCTP (Amersham) using the random labelling method of FEINBERG and VOGELSTEIN (1983). Prehybridization, hybridization, posthybridization washes and autoradiography were performed as described by Du Pont.

No Restriction Fragment Length Polymorphism (RFLP) could be detected with 75 genomic probe/enzyme combinations (Fig. 2). These results confirm the supposed close relationship between these two lines. However due to the restricted number of probe/enzyme combinations further experiments will be necessary in order to finally prove the close relationship of these lines.

Acknowledgements

We wish to thank Dr Jerry F. Miller, USDA-ARS, North Dakota State University, Fargo, ND, 58105, USA, for providing detailed information on sunflower germplasm.

References

BIRNBOIM, H. C. and J. DOLY, 1979: A rapid alkaline extraction procedure for screening recombinant plasmid DNA. - Nucl. Acids Res. 7:481-489.

FEINBERG, A. P. and VOGELSTEIN, 1983: A technique for radiolabelling DNA restriction endonuclease fragments to high specific activity. - Anal. Biochem. 132:6.

MANIATIS, F., E. F. FRITSCH and J. SAMBROOK, 1989: Molecular cloning (A LABORATORY MANUAL) - Cold Spring Harbour Laboratory Press.

MURRAY, M. G. and W. F. THOMPSON, 1980: Rapid isolation of high molecular weight plant DNA. - Nucl. Acids Res. 8:4321.

SOUTHERN, E. M., 1975: Detection of specific sequences among DNA fragments separated by gel electrophoresis. - J. Mol. Biol. 95:503-517.

ZIMMER, D. E. and M. L. KINMAN, 1972: Downy mildew resistance in cultivated sunflower and its inheritance. - Crop Sci. 12:749.